FEATURES AND SPECIFICATIONS:

1. 2" NPT, SIDE ENTRY, CONTROL VALVE
2. 5,000 PSI MAXIMUM OPERATING PRESSURE
3. TUNGSTEN CARBIDE LINED
4. HNBR/FKM SEALS

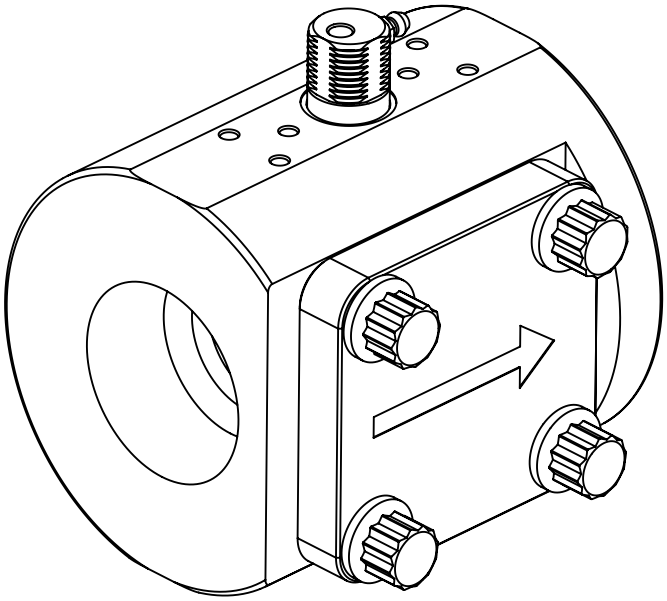

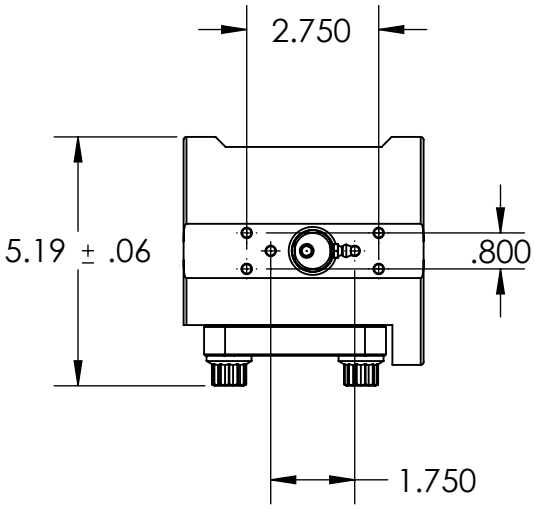

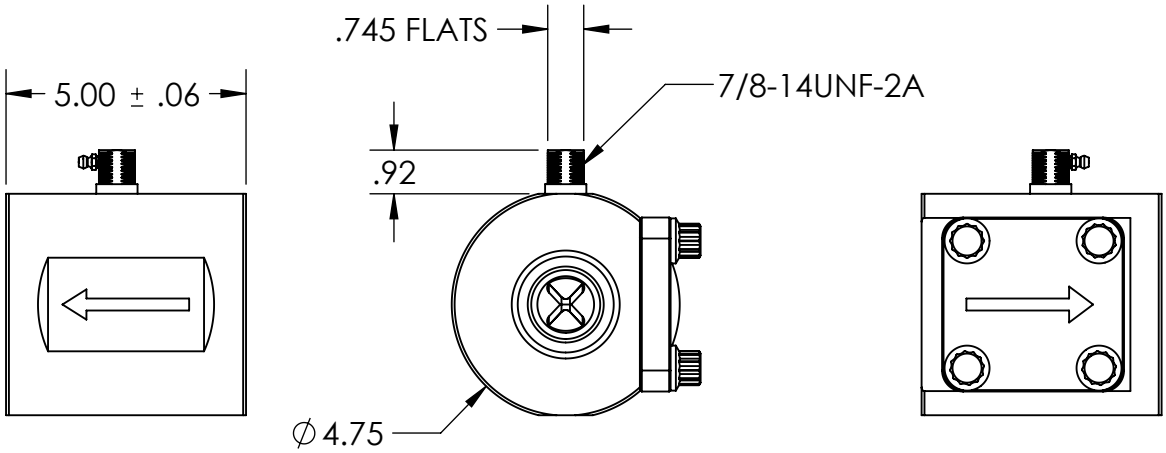

CUSTOMER SPECIFICATION DRAWING	Well Master Corporation	400 Corporate Circle Suite L-M Golden, Colorado 80401	
TITLE:	SIZE	DWG. NO.	REV
CONTROL VALVE, 5000 MOP, 180 DEGREE ROTATION, 2" NPT	A	VAL2050SADC	00
	SCALE: 1:4	WEIGHT:	SHEET 1 OF 1